HID to UART Chip CH9326

Datasheet
Version: V1.6
http://wch.cn

1. Introduction

CH9326 is a driver-free chip for HID to serial UART. CH9326 supports bi-directional data transmission, used to receive the serial UART data (such as ASCII code), and according to the HID device specification, the data is packaged and uploaded to the computer through the USB port, or receiving the USB data packet from the computer which is conform to the HID device and sending it from the serial UART. Through the provided PC software, the user can also configure the chip's VID, PID, and various string descriptors. The figure below shows the diagram of its general application.

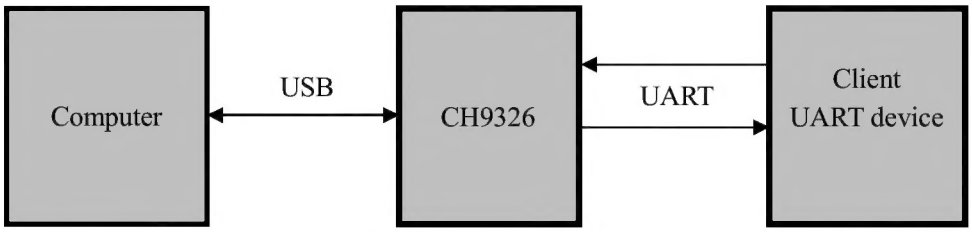

2. Features

- Supports 12Mbps full-speed USB device interface, USB 2.0 compatible, built-in crystal oscillator.
- Default serial communication baud rate is 9600bps, which supports multiple serial communication formats and common baud rate settings.
- Supports 5V and 3.3V supply voltage.
- Supports to configure the VID, PID, and various USB string descriptors of the chip.
- Supports to configure the default baud rate of the chip.
- Complies with USB related specifications and HID device related specifications.
- RoHS compliant SOP-16 lead-free package.

3. Package

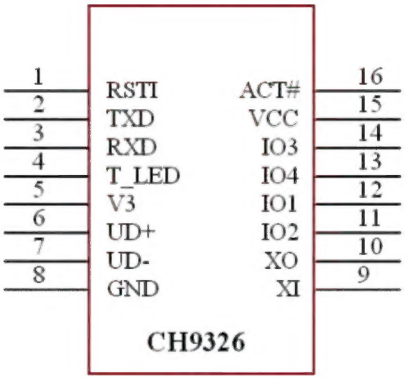

Package	Width Of Plastic		Pitch Of Pin		Instruction Of Package	Ordering Information
SOP16	3.9mm	150mil	1.27mm	50mil	Small outline 16-pin patch	CH9326

4. Pin Out

Pin No.	Pin Name	Pin Type	Pin Description
15	VCC	Power	Power supply voltage input, requires an external 0.1uF decoupling capacitor
8	GND	Power	Ground
5	V3	Power	Connect to VCC when VCC is 3V3, connect to 0.1uF decoupling capacitor when VCC is 5V
6	UD+	USB signal	Connect to USB D+ Signal directly
7	UD-	USB signal	Connect to USB D- Signal directly
1	RSTI	Input	External reset input, active low, built-in pull-up resistor
2	TXD	Output	Serial data output
3	RXD	Input	Serial data input, built-in pull-up resistor
4	T_LED	Output	Serial UART send status output, active high
9	XI	Input	For chip below V1.3: Input of crystal oscillator, requires an external crystal and oscillation capacitor For chip V1.3 and above: chip has integrated crystal oscillator, suspended
10	XO	Output	For chip below V1.3: Reverse output of crystal oscillator, requires an external crystal and oscillation capacitor For chip V1.3 and above: chip has integrated crystal oscillator, suspended
14	IO3	Bi-direction	User-configurable pin, used as GPIO
13	IO4	Bi-direction	User-configurable pin, used as GPIO
12	IO1	Bi-direction	User-configurable pin, used as GPIO
11	IO2	Bi-direction	User-configurable pin, used as GPIO
16	ACT#	Output	USB configuration completed status output, active low

5. Function Description

CH9326 has integrated power-on reset circuit.

When CH9326 uses 5V supply voltage, the V3 pin externally connects with decoupling capacitor with a capacity of about 0.1uF. When using 3.3V supply voltage, the V3 connects with VCC, inputs 3.3V power supply at the same time.

The ACT# pin of the CH9326 is the status output of USB device configuration completion that indicates that the USB device has successfully connected to the computer.

CH9326 has integrated independent transmit-receive buffer and supports simplex, half-duplex and full duplex UART communication. Serial data contains one low-level start bit, 5, 6, 7 or 8 data bits and 1 or 2 high-level stop bits, supports odd/even/mark/space parity. The default baud rate of CH9326 is 9600bps, it supports common baud rate: 50, 75, 100, 110, 134.5, 150, 300, 600, 900, 1200, 1800, 2400, 3600, 4800, 9600, 14400, 19200, 28800, 33600, 38400, 56000, 57600, 76800 and 115200. The baud rate error of the serial port transmitting signal is less than 0.3%, and the allowable baud rate error of the serial port receiving signal is not more than 2%.

CH9326 has integrated a related firmware for UART-to-USB HID communication, and which is a simple solution for UART-to-HID device. It also has integrated all the peripheral circuits required by the USB bus, including PLL and 12MHz USB clock, serial matching resistors for D+ and D-signals and 1.5KΩ pull-up resistor for Device, etc, and integrated crystal oscillator. The peripheral circuit is simple.

CH9326 complies with related technical specifications and supports plug-and-play. The Windows/Linux /Android/MAC OS has pre-installed with the corresponding drivers, after connection, CH9326 can be used with the corresponding software.

IO1, IO2, IO3 and IO4 are reserved pin. They can be configured as input/output by user and used as GPIO.

Through the provided PC software, the user can customize the chip's VID, PID and various string descriptors. You can also set the default serial communication baud rate after the chip is powered on. After this information is configured, it will be permanently stored inside the chip and will not be lost even if power off, unless it is reconfigured. It has not been set, the chip's default VID, PID, and string descriptors are enabled.

For the default serial baud rate, VID, PID and various string descriptor settings, as well as the usage of reserved IO pins, please refer to the provided software.

6. Parameters

6.1. Absolute Maximum Ratings

(Critical state or exceeding maximum can cause chip to not work or even be damaged)

Name	Parameter Description	Min.	Max.	Unit
TA	Operating ambient temperature	-40	85	℃
TS	Storage ambient temperature	-55	100	℃
VCC	Supply voltage(VCC connects to power, GND to ground)	-0.5	5.5	V
VIO	Voltage of input or output pin	-0.5	VCC+0.5	V

6.2. Electrical Parameters

(Test Conditions: TA=25℃, VCC=5V, exclude pins connected to USB bus)

Name	Parameter Description	Min.	Typ.	Max.	Unit
VCC	Supply voltage	3.0	5	5.3	V
ICC	Static supply current		15	30	mA
VIL	Input low voltage	-0.5		0.8	V
VIH	Input high voltage	2.0		VCC+0.5	V
VOL	Output low voltage (8mA draw current)			0.5	V
VOH	Output high voltage (8mA output current)	VCC-0.5			V
IUPrxd	Input current of RXD with built-in pull-up resistor	40	80	160	uA
IDNrst	Input current of RSTI with built-in pull-down resistor	-10	-150	-240	uA

7. Application

7.1. HID to UART

The figure below shows that CH9326 realizes HID device to UART.

P1 is USB port, USB bus contains a pair of 5V power lines and a pair of data signal lines. Usually, the color of +5V power line is red, the black one is ground. D+ signal line is green and the D- signal line is white. The max supply current provided by USB bus is up to 500mA. Generally, CH9326 and low-power USB products can directly use the 5V power supplied by USB bus. If the USB products use standing power provided by other supply methods, CH9326 also can use this power. If the USB bus power and standing power are necessary at the same time, connecting a 1Ω resistor between 5V power line of USB bus and 5V standing power line of USB product, and directly connecting the ground lines of two powers.

P2 is TTL serial port, TXD is serial data transmitted pin of CH9326 and RXD is serial data received pin of

CH9326.

P3 are four reserved GPIO pins that user can configure and use.

The capacitor C3 is 0.1uF, used for internal power node decoupling of CH9326. Capacitor C2 is 0.1uF, used for external power decoupling. Crystal X1, resistor R1 and capacitor C4 are used for clock oscillation circuit. X1 is 12MHz quartz or ceramic crystal, C4 and C5 are monolithic or high frequency ceramic capacitors with a capacity of 20~47pF. If X1 selects the ceramic crystal with low cost, the capacity of C4 and C5 must use the recommended value of crystal manufacturer and generally is 47pF.

Note: For CH9326 V1.3 and above, has integrated crystal oscillator, so X1, C4, C5 are not required and it is recommended to reserve location.

Capacitor C1 is optional, only used to extend the reset time of CH9326 when power-on.

Resistor R2 and LED L1 are optional, only used to indicate the USB connection status.
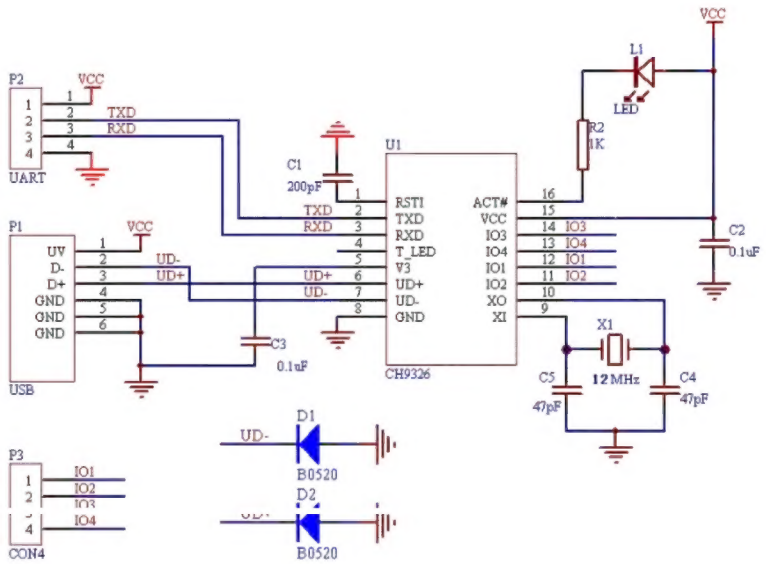
When designing the PCB, pay attention to: decoupling capacitor C2 and C3 get as close to connected pins of CH9326; making sure D+ and D- signal lines are close to the parallel wiring and providing ground or copper on both sides to reduce signal interference from the outside; the signal line length of XI and XO pin should be keep as short as possible. In order to reduce the high frequency interference, arranging the ground or copper around the relevant components.